Guy Strain Insulators

Catalog Numbering System

G	X	X	XX	-	X	X

End Fitting Types

C	=	Clevis
TE	=	Thimble Eye
YC	=	Y-Clevis (except 15K lbs)

Minimum Ultimate Strength Rating (lbs)

15	=	15,000
21	=	21,000
30	=	30,000
36	=	36,000

Length (L)

For standard lengths, see tables below

Custom lengths available, consult your sales representative for details

Roller

Omit to specify without roller(s)

R	=	Single roller
R2	=	Roller each end (Clevis-Clevis only)

*For 50,000 lb and 80,000 lb guy strain insulator options, see page FG-5.

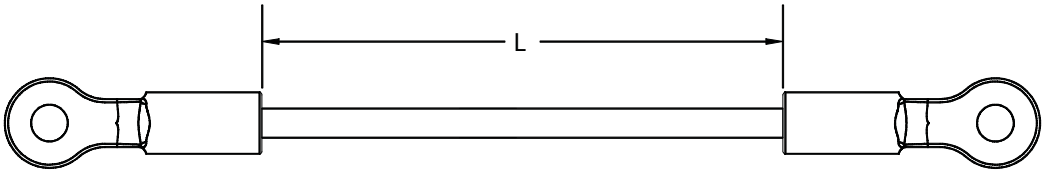

Example

- 78" Guy Strain Insulator
- Clevis - Clevis end fittings
- 15,000 Lb minimum ultimate strength rating
- Roller on each end

Catalog Number - GCC15-78R2

15,000 Lb Minimum Ultimate Strength Rating		
Catalog Number		Length (In)
Clevis-Clevis	Clevis-Thimble Eye	
GCC15-12R	GCTE15-12R	12
GCC15-18R	GCTE15-18R	18
GCC15-24R	GCTE15-24R	24
GCC15-36R	GCTE15-36R	36
GCC15-42R	GCTE15-42R	42
GCC15-54R	GCTE15-54R	54
GCC15-78R	GCTE15-78R	78
GCC15-96R	GCTE15-96R	96
GCC15-120R	GCTE15-120R	120
GCC15-144R	GCTE15-144R	144

21,000 Lb Minimum Ultimate Strength Rating		
Catalog Number		Length (In)
Clevis-Clevis	Clevis-Thimble Eye	
GCC21-12R	GCTE21-12R	12
GCC21-18R	GCTE21-18R	18
GCC21-24R	GCTE21-24R	24
GCC21-36R	GCTE21-36R	36
GCC21-42R	GCTE21-42R	42
GCC21-54R	GCTE21-54R	54
GCC21-60R	GCTE21-60R	60
GCC21-78R	GCTE21-78R	78
GCC21-90R	GCTE21-90R	90
GCC21-96R	GCTE21-96R	96
GCC21-120R	GCTE21-120R	120
GCC21-144R	GCTE21-144R	144

30,000 Lb Minimum Ultimate Strength Rating		
Catalog Number		Length (In)
Clevis-Clevis	Clevis-Thimble Eye	
GCC30-24R	GCTE30-24R	24
GCC30-36R	GCTE30-36R	36
GCC30-42R	GCTE30-42R	42
GCC30-54R	GCTE30-54R	54
GCC30-78R	GCTE30-78R	78
GCC30-96R	GCTE30-96R	96
GCC30-120R	GCTE30-120R	120
GCC30-144R	GCTE30-144R	144

36,000 Lb Minimum Ultimate Strength Rating		
Catalog Number		Length (In)
Clevis-Clevis	Clevis-Thimble Eye	
GCC36-18R	GCTE36-18R	18
GCC36-54R	GCTE36-54R	54
GCC36-60R	GCTE36-60R	60
GCC36-78R	GCTE36-78R	78
GCC36-90R	GCTE36-90R	90
GCC36-120R	GCTE36-120R	120
GCC36-144R	GCTE36-144R	144

© Copyright 2010 MacLean Power Systems
Issued: May 2010
Supercedes: n/a

11411 Addison Avenue, Franklin Park, IL 60131
T: 847.455.0014 F: 847.455.0029
www.macleanpower.com

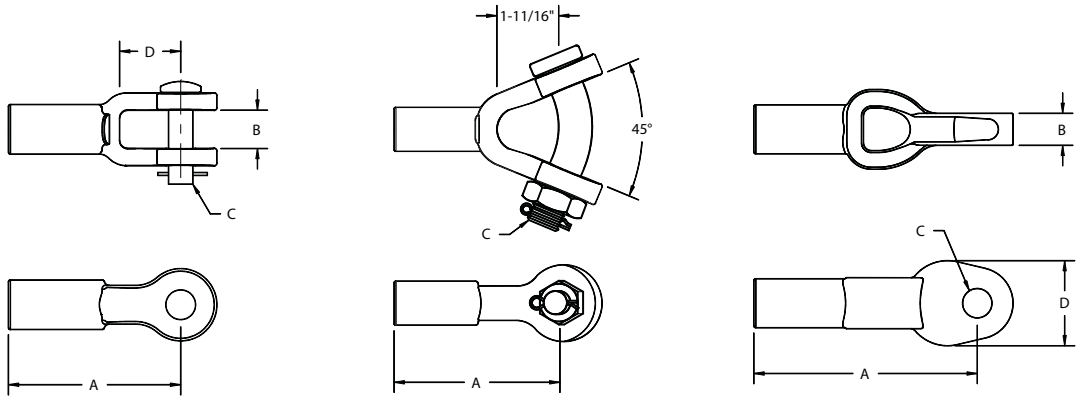

Dimensions (In)	Clevis (C)				Y-Clevis (YC)				Thimble-Eye (TE)			
	15000	21000	30000	36000	15000	21000	30000	36000	15000	21000	30000	36000
A	4	4	6 1/2	6 1/2		4 1/8	6 1/16	6 1/16	4 5/8	4 15/16	7 1/4	7 1/4
B	15/16	15/16	1	1					17/32	11/16	13/16	13/16
C	5/8	5/8	3/4	3/4		3/4	3/4	3/4	11/16	11/16	13/16	13/16
D	1 3/8	1 3/8	2	2					1 5/8	1 3/4	2 3/8	2 3/8

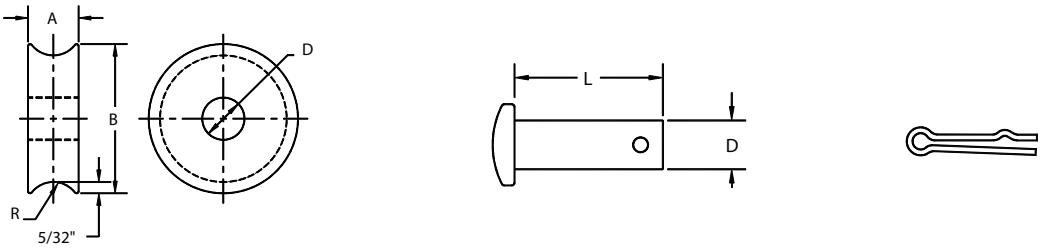

Roller						Clevis Pin				Cotter Pin		
Catalog Number	Rating (Lbs)	A (In)	B (In)	D (In)	R (In)	Catalog Number	Rating (Lbs)	D (In)	L (In)	Catalog Number	Rating (Lbs)	Pin Dia (In)
R-17-5	15000	3/4	1 7/8	11/16	5/16	CP-5	15000	5/8	2 1/8	M-111-3A	15000	5/8
	21000					CP-5-21	21000	5/8	2 3/8			
R-24-6	30000	27/32	2 3/8	13/16	13/32	CP-6-30	30000	3/4	2 1/2	M-111-2A	30000	3/4
	36000						36000					

© Copyright 2010 MacLean Power Systems
Issued: May 2010
Supercedes: n/a

11411 Addison Avenue, Franklin Park, IL 60131
T: 847.455.0014 F: 847.455.0029
www.macleanpower.com

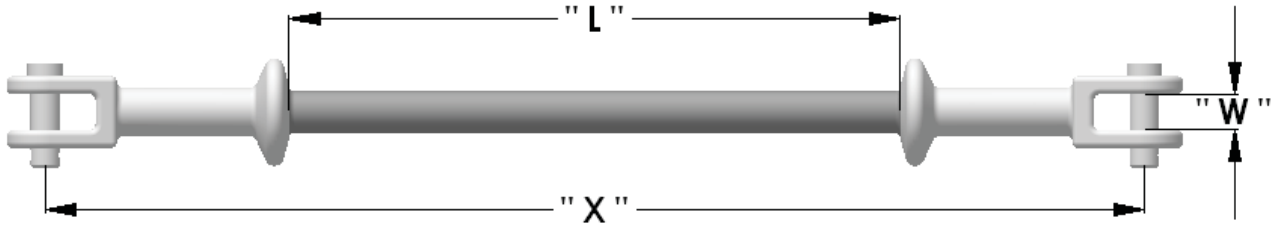

GCC50 Series

	Catalog Number	Rod Length "L" inch	Connection "X" inch	Clevis Opening "W" inch
Min. Ultimate Strength Rating: 50,000 lbs.	GCC50-18-SC	18	32	15/16"
	GCC50-24-SC	24	38	15/16"
	GCC50-36-SC	36	50	15/16"
	GCC50-42-SC	42	56	15/16"
	GCC50-54-SC	54	68	15/16"
	GCC50-60-SC	60	74	15/16"
	GCC50-78-SC	78	92	15/16"
	GCC50-90-SC	90	104	15/16"
	GCC50-96-SC	96	110	15/16"
	GCC50-120-SC	120	134	15/16"
	GCC50-144-SC	144	158	15/16"

Notes:
1) Minimum Ultimate Strength Rating - 50,000 lbs
2) Rod coated in Silicone Rubber
3) Cotter Pin Diameter - 3/4"

GCC80 Series

	Catalog Number	Rod Length "L" inch	Connection "X" inch	Clevis Opening "W" inch
Min. Ultimate Strength Rating: 80,000 lbs.	GCC80-18-SC	18	37	1 1/16"
	GCC80-24-SC	24	43	1 1/16"
	GCC80-36-SC	36	55	1 1/16"
	GCC80-42-SC	42	61	1 1/16"
	GCC80-54-SC	54	73	1 1/16"
	GCC80-60-SC	60	79	1 1/16"
	GCC80-78-SC	78	97	1 1/16"
	GCC80-90-SC	90	109	1 1/16"
	GCC80-96-SC	96	115	1 1/16"
	GCC80-120-SC	120	139	1 1/16"
	GCC80-144-SC	144	163	1 1/16"

Notes:
1) Minimum Ultimate Strength Rating - 80,000 lbs
2) Rod coated in Silicone Rubber
3) Cotter Pin Diameter - 1"

© Copyright 2010 MacLean Power Systems
Issued: May 2010
Supercedes: n/a

11411 Addison Avenue, Franklin Park, IL 60131
T: 847.455.0014 F: 847.455.0029
www.macleanpower.com